VALCO MELTON™

C SERIES QUICK GUIDE
GUIA RAPIDA SERIE C

This page has been purposely left blank

Declaration of conformity

The product: _____

Model no.: _____

Serial no.: _____

Year of manufacture: _____

Described in the enclosed documentation is in conformity with:

- Directive 98/37/EC of 22 June 1998 relating to the *approximation of the laws of the Member States relating to machinery,* combining in a single text Directives 89/392/EEC of 14 June 1989, 91/368/EEC of 20 June 1991, 93/44/EEC of June 14, 1993 and 93/68/EEC of 22 July 1993.
- Directive 73/23/EEC of 19 February 1973 relating to electric equipment.
- Directive 89/336/EEC of 3 May 1989 relating to electromagnetic compatibility.
- Directive 93/68/EEC of 22 July 1993, amending Directive 73/23/EEC, and Directive 89/336/EEC.

within the scope of the specifications indicated in the chapter describing the equipment with a B1 risk level. Since it is intended to form part of a set of machines which, to obtain a result, are arranged and connected to perform together, it cannot be operated until the set of machines has been declared in conformity with the applicable Directives by the person responsible for the final assembly.

*Orcoyen, on :*_____

*Signed.:*_____

Gonzalo Marco, Managing Director

VALCO MELTON™

VALCO MELTON S.L.U. Pol. Ind. Agustinos C/G 34 3116 0
TEL: +34 948 321580 Fax: +34 948 326584 melton@melton.es www.valcomelton.com
ORCOYEN, NAVARRA (SPAIN)

This page has been purposely left blank

VALCO MELTON S.L.U. Pol. Ind. Agustinos C/G 34 3116 0 ORCOYEN, NAVARRA

TEL: +34 948 321580 Fax: +34 948 326584 melton@melton.es www.valcomelton.com

CHAPTER 1 SAFETY INSTRUCTIONS



Burns:

Burns can be caused by the uncovered parts of the applicator, such as the guns or by splashes of hot melt.

The hot adhesive under pressure in the nozzles can cause serious injuries to the skin.



Qualified personnel:

This is personnel (technical staff) who has acquired sufficient know-how in a specific field, either through training or from experience.

This personnel must be familiar with safety and accident prevention standards, and have general knowledge of the technical aspects of the machine.

Protective clothing:

This clothing will be compliant with EN510 and EN340 standards, protecting against fast-moving particles and high temperatures.

It will be as tight as possible to prevent it from catching on mobile machine parts, and the sleeves, waist, legs, etc. will be adjustable to the size of the wearer.



Goggles and face shields:

They will be compliant with the EN 166 standard, protecting against fast-moving particles and high temperatures.

Goggles only protect the eyes. Face shields are therefore preferable, since they protect the entire face.



Protective gloves:

They will be compliant with EN 407 and EN 420 standards, protecting the hands against the burns caused by external thermal masses at temperatures of above 100 ℃.



Susceptible elements to electrostatic discharge:

During the equipment manipulation, contacts with electronic elements and the metallic parts of connectors must be avoided.



PURPOSE:

This unit has been manufactured according to current safety standards.

This unit has been designed for the purpose described in chapter 2 of this manual, Description.



To use the machine correctly, follow the instructions provided in the Operating Manual, particularly:

VALCO MELTON S.L.U. Pol. Ind. Agustinos C/G 34 3116 0 ORCOYEN, NAVARRA

TEL: +34 948 321580 Fax: +34 948 326584 melton@melton.es **www.valcomelton.com**

- The machine should only be installed and used by qualified personnel, previously familiarised with the operating instructions (contacting the manufacturer whenever necessary) and the risks involved, the safety measures required, including adjustment and maintenance, and expressly forbidden operations.
- This unit has not been manufactured to operate in hazardous, explosive and/or flammable atmospheres
- When working with this machine, wear protective clothing, gloves and face shields and remove rings, bracelets and watches.
- Since the machine is designed to form part of a series of machines, arranged to work together, the hot melt applicator cannot be operated until the entire series has been declared in compliance with applicable directives.
- This machine should never work without the guards provided (which should not be removed). These guards should be checked and maintained with the specified frequency.
- Make sure that the equipment is properly grounded.
- Never operate the machine if you are aware that there is a leak in the glue circuit.
- Maintenance operations and/or repairs should be performed by personnel with basic knowledge of the machine and the mechanical, pneumatic and electric circuits involved.
- Maintenance operations and/or repairs should always be performed with the machine switched off at the mains, and with the main switch blocked.
- Maintenance operations and/or repairs should always be performed with the machine de-pressurised and disconnected from the pressure circuit.

CHAPTER 2 DESCRIPTION

This machine heats hot-melt adhesive (or similar materials) until it goes from solid to liquid state in a heated container. A pump absorbs the glue at a certain pressure through heated hoses and transfers it to where it is applied.

MAIN PARTS:

The main parts of a machine are shown on the following figure:

Las partes principales del equipo se pueden observar en la figura siguiente:

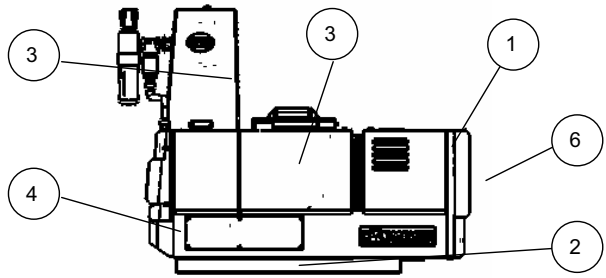

VALCO MELTON S.L.U. Pol. Ind. Agustinos C/G 34 3116 0 ORCOYEN, NAVARRA
TEL: +34 948 321580 Fax: +34 948 326584 melton@melton.es **www.valcomelton.com**

N.	DESCRIPTION
1	Electric closet
2	Frame
3	Pump
4	Manifold
5	tank
6	Control panel

CHAPTER 3 INSTALLATION OF THE MACHINE

This chapter explains how to install the machine correctly.

WARNING: The operations described in this chapter should be performed by qualified personnel, following safety instructions.

The equipment is supplied packed with a paperboard box (approx. dimensions: 75x47x72mm).
Approximate weight: 60 kg.
Remove the top cover to unpack.

Unpack carefully to prevent damage to the machine. Inspect the equipment for damages caused during transport.

INSTALLATION REQUIREMENTS:

Install the follower plate leaving enough space for the equipment to be accessed during operations.

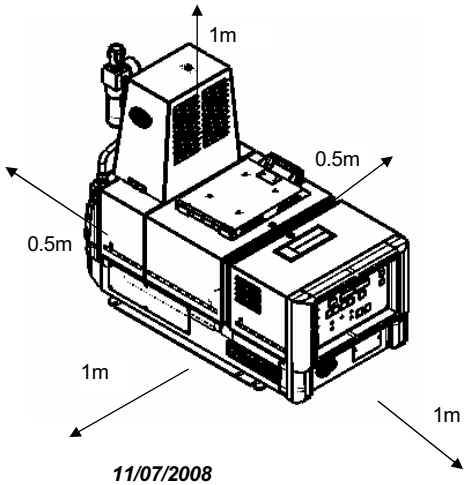

VALCO MELTON S.L.U. Pol. Ind. Agustinos C/G 34 3116 0 ORCOYEN, NAVARRA
TEL: +34 948 321580 Fax: +34 948 326584 melton@melton.es **www.valcomelton.com**

Avoid extreme temperatures (below -10℃ and above + 50 C).
Try to avoid installing the equipment where there are draughts. If this is not possible, the guns will need protecting because if the temperature falls rapidly they may not work properly.

. MECHANICAL INSTALLATION:

The mechanical installation includes the following:

- Positioning the equipment.
- Connecting the hoses.

Positioning the equipment:

Remove from the box, and position according to installation requirements (chapter 3.3)

Connecting the hoses:

Proceed as follows:

Make sure that the equipment is depressurised before connecting the hose. Set the motor control selector to zero and bleed with bleed valves. Heat the machine to melt any adhesive that may be present.

Connect the hose to the tank and the gun, electrically and mechanically.

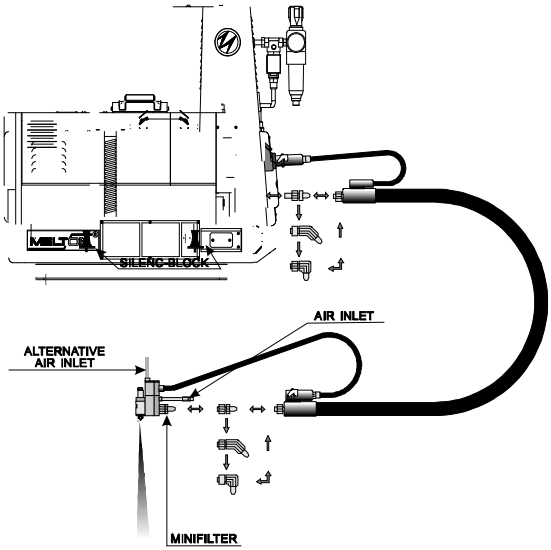

VALCO MELTON S.L.U. Pol. Ind. Agustinos C/G 34 3116 0 ORCOYEN, NAVARRA
TEL: +34 948 321580 Fax: +34 948 326584 melton@melton.es **www.valcomelton.com**

Start to connect the hoses from right to left. If you do not do this, you will create a dead centre where carbon deposits will accumulate, thereby increasing problems of nozzle blockage.

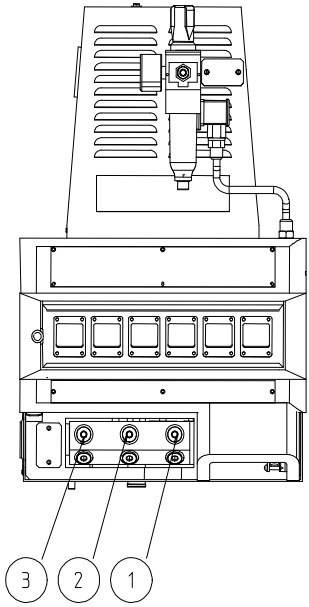

For the hydraulic connection, if the equipment is full of adhesive heat the tank before remove the manifold cap.

Installation of hoses:

Never bend the hoses more than curves of 150 mm radius.

The hoses should not be in contact with very wide cold surfaces.

Do not install hoses together; leave a minimum separation (25 mm) between them so that the heat can dissipate.

Do not cover the hoses, if it is necessary to do this leave ventilation holes that the heat can be dissipated

PNEUMATIC INSTALLATION:

Connect the electrovalve – filter unit to the rear of the pneumatic sensor. Connect the air line to the regulator by a ¼" thread NPT pneumatic connector. Ensure that the air line has sufficient capacity for the pump to work correctly.

To connect the unit to the machine, simply push the air connection of the electrovalve outlet through the housing at the rear of the cap nut of the pump. If it clockwise twists, the unit is

fixed correctly.

Connect the electrovalve to the connector located on top of the rear gate.

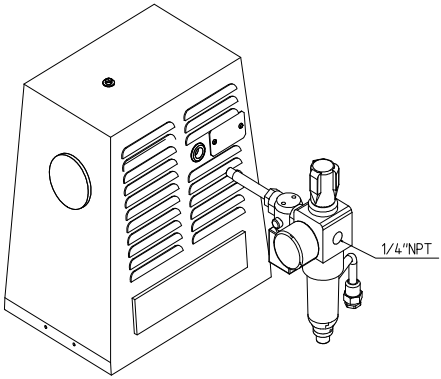

ELECTRIC INSTALLATION:

The electric installation depends on the model. See electric diagrams.

CHAPTER 4 MACHINE ADJUSTMENT

The following adjustments should be made before the machine is switched on or while it is working. They will ensure that the machine works properly and safely.

4.1. TEMPERATURE CONTROL:

4.1.1. Introduction:

The temperature of the tank, hoses and guns in the Hot – Melt application equipment is regulated by a digital electronic device controlled by microprocessor.

Regulation is proportional, with factory-set parameters for the separate heating inertias of the tank, hoses and guns.

The temperature is measured by the RTD sensor on each of the heating devices. These can be programmed individually and on each output channel between 30º - 220º C.

The rangeability (measurement range) of the controller is between -10ºC and 220º C; below 10ºC the equipment will show a sensor failure by short-circuit and above 220º C the display shows 'fault – open sensor'.

Below -10 ℃, the equipment will display a probe short c ircuit fault. Above 220 ℃, the display will report on an open probe fault.

VALCO MELTON S.L.U. Pol. Ind. Agustinos C/G 34 3116 0 ORCOYEN, NAVARRA

TEL: +34 948 321580 Fax: +34 948 326584 melton@melton.es **www.valcomelton.com** ENGLISH

4.1.2. Brief description of how the unit operates:

The SERIE C is equipped with proportional temperature control for the resistances connected to 4 double hose-gun channels and a special channel for heating the tank, with menus to access parameter programming and control of the external circuit pressure pump, operating clearance for the main machine, alarms and different operating functions (SCAN, ENERGY SAVING, etc.), which will be described later.

The control panel includes a 10-digit display with 7 ultra-bright segments showing the unit's operating data, plus the alarms that are produced by the sensor signals. There are also LEDS displaying resistance bar output status, pressure pump, overheating alarms, safety and energy saving status.

Preheat function:

Because the heat inertia of the glue tank is much greater than for all the peripheral devices, these devices reach the programmed temperature much earlier than the tank. This rapid heating process has an ageing effect on resistances and insulation. This phenomenon also creates excessive fluid pressure in the hoses.

To offset this problem, the unit has been fitted with a preheat system that heats all the peripheral devices (hoses and guns) in a sequential manner, while the tank is heated at normal speed. When the tank reaches 75% of the programmed temperature, heat is supplied to the hoses. When the hoses reach 75% of the programmed temperature, heat is supplied to the guns.

4.1.3. Description of the control panel:

Keyboard:

The SERIE C control panel has 11 control keys that provide access to the programme menus and general operating processes.

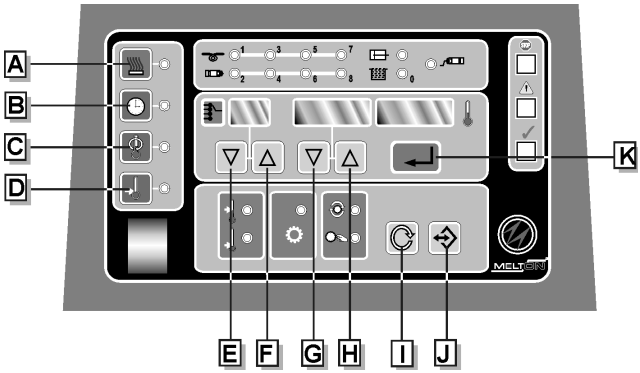



A KEY: (Heating On/Off) This key switches the equipment on or off. When it is switched on it will return to the operating mode at which it was previously switched off, either ON or ENERGY SAVING. When the equipment is switched off, the display shows the day of the week and the time, and the day of the week and time when it will automatically switch on again if the TIMER function is enabled.

VALCO MELTON S.L.U. Pol. Ind. Agustinos C/G 34 3116 0 ORCOYEN, NAVARRA

TEL: +34 948 321580 Fax: +34 948 326584 melton@melton.es **www.valcomelton.com**



B KEY: (Clock On/Off) This key switches the TIMER function on or off. With the function ON, the automatic on/off programme is enabled.



C KEY: (Scan On/Off) This key switches the SCAN function on and off. With the function on, a sequence of the SET and PRESENT temperature values of all the channels is displayed.



D KEY: (energy saving On/Off). This key is used to set the equipment on hold, with reduced electricity consumption (ENERGY SAVING), adjusting the temperature to the programmed percentage values.



E KEY: (DOWN). This key changes the display for the different devices (tank, hoses, guns). It moves from top to bottom and returns to the start of the sequence after the last value is displayed. It is used to display and programme the PRESENT and SET temperature, parameters and the timer.



F KEY: (UP selection) This key also changes the display for the different devices (tank, hoses, guns). It moves upwards and returns to the start of the sequence after the last value is displayed. It is used to display and programme the PRESENT and SET temperature, parameters and the timer.



G KEY: (DOWN data) This key changes the data from top to bottom in the different programming modes (it does not work in operating mode).



H KEY: (UP data) This key changes the data, from bottom to top, in the different programming modes (it does not work in operating mode).



I KEY: (Programming) This key moves through all the programming menus.

J KEY: (Programming) This key enters and exits the equipment parameters menu.



K KEY: (ENTER) This key is used to validate the data that has been changed in the programmes. It does not work in operating mode. To validate a programme entry, press **ENTER** until the display blinks.

4.1.3.2 Display:

The control panel has a 10-digit 7-segment display in 3 blocks.

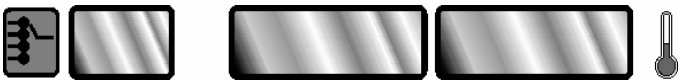

The two digits on the left indicate the device for which the information appears in the blocks of digits further to the right.

The central 4-digit block displays the SET operating temperature and the programmed parameter values.

The 4-digit block on the right displays the PRESENT operating temperature and it is also used as a display in some programming stages.

4.1.3.3 LEDS:

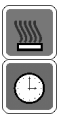

ON/OFF LED: This shows that the equipment is switched on and in HEATING mode, or on hold pending key activation, or on hold pending being switched on by the timer.

TIMER LED (LED RELOJ): This shows that the TIMER function is switched on. If the light is

off, the equipment will not automatically switch on or off at a previously programmed time.



SCAN LED: This shows that the SCAN function is switched on. If the light is on, the equipment will display a sequence of the temperatures of all the enabled resistances.



B.M. LED: This shows that the equipment is on ENERGY SAVING, which means that all the channels are adjusted to the programmed % of the operating temperature.



LEDS 1,3,5,7: They show that the power outputs that supply the resistances for the hot-melt hoses are switched on.

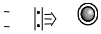

LEDS 2,4,6,8: These lights show that the power outputs to the resistances for the extrusion guns are switched on.



LED 0: This shows that the tank resistances are switched on.



LED B1: This shows that the circuit pressure pump and the external clearance relay are enabled.



STOP LED: When this light is on, it means that the equipment has been disconnected from the electric mains because there has been a serious fault in one of the measuring sensors or because the temperature of one of the heating devices has risen above the programmed safety temperature. If it flashes on and off for 2.5 minutes, it warns of a safety alarm situation or faulty sensors. If the problem is not solved in this time, the equipment will shut down.



AL LED: This is a warning that there is a device outside the correct temperature range (programmed SET ± deviation), or that a sensor is open or short-circuited.



OK LED: When this light is on, it means that the temperature of all the devices is correct and that there is no alarm situation.



If it flashes on and off, it means that the equipment is pre-heating before the pump is enabled and external clearance is given.

P.TEMP. LED: The operating temperature of the different devices is being programmed.



PBM. LED: The % values of the operating temperatures for the different devices (divided into 3 groups: tank, hoses, guns) are being programmed for adjustment in ENERGY SAVING.



P.PAR. LED: The general operating parameters are being programmed.



P.REL1. LED: The timer on/off parameters are being programmed.



P.REL2. LED: The hour and date are being set on the timer.



EXT.TRIG.LED: This shows if the equipment is receiving external glue shot impulses. The equipment goes into ENERGY SAVING if the programmed time is exceeded without glue shots.

4.1.3.4 Functions:

ON/OFF function:



The unit has a key for setting it in OPERATING mode (ON) or on hold (OFF), and an optional external ON/OFF signal. In operating mode, the information described is displayed on the temperature control. When the unit is on hold, the display shows the present date and the next programmed time and the date and time that the unit is to be switched on and off, if the TIMER function is enabled.

TIMER function:



The TIMER key is used to enable/disable the automatic timer function to switch the unit on and off through the timer on the electronic card. When the TIMER function is on, the unit automatically switches on and off according to the timer. When the TIMER function is off, all timer programming is cancelled.

SCAN function:



The SCAN key enables/disables the SCAN function.

This SCAN function displays a sequence of the present temperatures of all the channels that are connected. The temperatures appear every 4 seconds, and go from the bottom to the top. This function only works when the equipment is in operating mode.

In programming mode, the SCAN function is cancelled.

ENERGY SAVING function:



The SERIE C can be set on ENERGY SAVING to obtain important energy savings in 4 different ways, by selecting the temperatures of all the devices at a programmed % of their operating value (with proportional control). The display will read as follows:

The associated pump and external clearance will be disabled and the corresponding LED will light up.

This function can be entered in four different ways:

- By pressing the  key.
- By programming the timer.
- By enabling the external ENERGY SAVING signal (OPTION).
- At the end of a programmed time in which there has been no glue shot (OPTION).

Temperature adjustment:

The control panel is designed for proportional temperature control, with parameters factory-adjusted to the heating inertia of the tank, hoses and adhesive guns. Heat inertia is greater for the tank, and therefore this temperature control range is wider than for the hoses and guns.

When the heating devices enter into the proportional range, the associated LED signals blink at a speed that depends on the rate of electricity supply.

icity supply.

Pump-clearance control:

The pressure pump and the associated external clearance relay (with power-free contacts) are switched on when the temperature of all the resistances (tank, hoses and guns) reaches 20ºC (36ºF) below the programmed temperature. They are switched off when any one of them reaches 25ºC (45ºF) below programmed temperature.

There is a delayed clearance parameter (P3) that provides extra heating time when the tank starts at a temperature lower than 65% of the operating temperature. Once the tank is in normal operation (including electrical faults) and does not fall below 65%, delayed clearance is inhibited.

VALCO MELTON S.L.U. Pol. Ind. Agustinos C/G 34 3116 0 ORCOYEN, NAVARRA

TEL: +34 948 321580 Fax: +34 948 326584 melton@melton.es **www.valcomelton.com**

Preheat function:

Because the heat inertia of the glue tank is much greater than for all the peripheral devices, these devices reach the programmed temperature much earlier than the tank. This rapid heating process has an ageing effect on resistances and insulation. This phenomenon also creates excessive fluid pressure in the hoses.

To offset this problem, the SERIE C has been fitted with a preheat system that heats all the peripheral devices (hoses and guns) in a sequential manner, while the tank is heated at normal speed. When the tank reaches 75% of the programmed temperature, heat is supplied to the hoses. When the hoses reach 75% of the programmed temperature, heat is supplied to the guns.

4.1.3.5 Alarms:

The SERIE C has several alarms, informing of faults in the measurement sensors, out-of-range temperatures or temperatures above programmed safety levels.

The unit has several alarms, informing of faults in the measurement sensors, out-of-range temperatures or temperatures above programmed safety levels.

Alarms types



Solid green light: Unit is ready for operation.

Solid yellow light: Temperature is outside set point.

Flashing yellow light + audible buzzer: Feeder is not filling the tank.



Solid yellow light and flashing red light: Failure in RTD (displayed by AAA or CCC on display). You have 2.5 minutes to solve warning before machine stop.

Solid red light + audible buzzer: Machine security stop. Failure in RTD or overheating. All leds will be disabled and display will flash. Audible buzzer will sound for any feeder or stop alarm. You can stop this buzzer by pressing the  key. Feeder alarm will reset once the level is ok again.



– **Security:**

Whenever a device reaches the programmed safety temperature (P4), the amber LED will light up, the external alarm will be switched on and the red LED will flash off and on for 2.5 minutes. If all the problems have not been solved after 2.5 minutes, the red LED will remain on all the time, the outputs will be blocked (at the main switch) and the equipment will cease to function. The display will flash on and off.

The equipment also includes a safety system with a bimetallic thermostat on the wall of the tank, adjusted to 240ºC (490 oF).

When the thermostat is triggered, it will de-activate the main switch coil, disconnecting the power to the heating resistances but continuing to supply the control electronics, so that the control panel display can identify the device that is the source of the problem.

When the equipment is blocked like this, the sensor temperature readings are frozen and the user can check the status of each sensor.

After repairing the fault, the equipment has to be switched off and on again.



– **Amber:**

Temperature:

VALCO MELTON S.L.U. Pol. Ind. Agustinos C/G 34 3116 0 ORCOYEN, NAVARRA

TEL: +34 948 321580 Fax: +34 948 326584 melton@melton.es **www.valcomelton.com** ENGLISH

Each time the temperature of a device goes outside the programmed ALARM MARGIN (P5, P6 & P7), the alarm signal will be enabled and the out-of-range temperature amber LED will light up solid.

Sensor faults:

If there is a short circuit in one of the measuring sensors, the equipment will display "CCC" instead of the temperature for the part (tank, hose, gun) involved. If an open circuit sensor fault is detected, the display will show "AAA" instead of the temperature.

When an alarm of this kind occurs and the relevant channel is on, the amber LED will light up, the external alarm will be switched on and the red LED will flash on and off for 2.5 minutes. If all the problems have not been solved after 2.5 minutes, the red LED will remain on all the time, the outputs will be blocked (at the main switch) and the equipment will cease to function.

Filter change alarm:

We get a filter change alarm once the equipment reaches 2000 hours (P10, by default 2000 hours) of work. We can recognize this alarm when the three leds pointed below Start blinking at the same time (Red+Yellow+Green). We can reset the alarm by selecting channel P10 and push clock button.

Alarm reset process as follows:

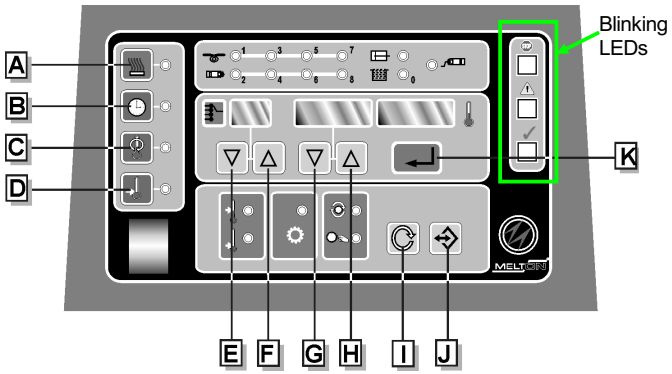

Push "J" → You gain access to program menu.

Push "I" → Go to P0. (If you get directly P1 –A go to next step).

Introduce Password → P0 = "123" + ENTER = "K"

Introduce → P1 = "1". + ENTER = "K"

Push "F" until you get to P10.

Push "B" → The filter change alarm is now off.

Push "E" until you get to P1.

VALCO MELTON S.L.U. Pol. Ind. Agustinos C/G 34 3116 0 ORCOYEN, NAVARRA

TEL: +34 948 321580 Fax: +34 948 326584 melton@melton.es **www.valcomelton.com** ENGLISH

Introduce P1 = "0" + ENTER = "K"



Push "J" in order to exit the program menú.

End of filter change alarm reset process .



– **Green**

When this light is on, it means that the temperature of all the devices is correct and that there is no alarm situation. The unit is ready for operation.

4.1.3.6 Connections with the main equipment:

External clearance:

This contact (potential free) is closed when the equipment is prepared to work , that is to say, when the pump permission has occurred.

Alarm indicator:

This contact (free potential) is closed when the control connects the ALARM LED.

Security stop indicator:

This contact (free potential) is closed simultaneously that control activates STOP LED.

Access levels:

There are two level accesses:

a) Programming mode → P0 = 232; P1=[1]

b) Modify all configuration→ P0 = 123; P1=[2]

These two levels imply that the parameter P1 must have three types of access:

a) P1 = 2, no passwords. We can enter with programming mode and modify the parameters P.

b) P1 = 1, we can enter with programming mode but don`t modify the parameters P (except P0 and P1 = [0,1]) ([Acceptable range])

c) P1 = 0, when we try to enter in programming mode appears P0 to introduce the password. If we push ENTER with a incorrect password, the system goes out of the programming mode. Push ENTER button with a correct password the system enter to the programming menu, and then we must confirm to fix the level access. If we don't confirm the access, then we lose the privilege when we go out of the programming menu. We could introduce both passwords (232, 123), in case of introduce 123, then we could go to programming menu to modify the parameter P1 to 2. (It isn't necessary to introduce the passwords with any order 232→123).

The navigation in the access password (P0) will permit to go 0 to 255 in any direction, growing or decreasing.

The parameter P0 will be free access but when we visualize it, always we see 000, independently of level access.

The parameter P1 will have limited the possible modifications depending on level access or password.

4.1.3.7 Program menus:

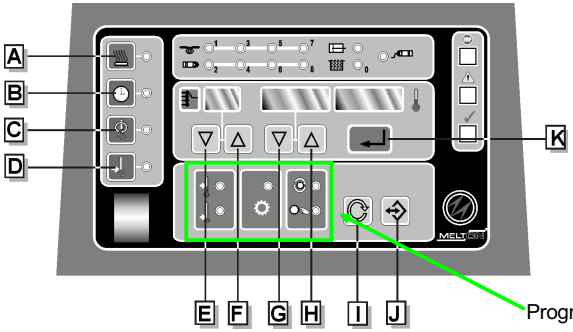

Temperature programme menu:

To pre-select the operating temperature for each hose and gun and the tank in a range between 30ºC and 240ºC (86-464ºF). Below 30ºC (86ºF) the device is permanently switched OFF.

LED on: The working temperature of the different devices is being programmed.

ENERGY SAVING programme menu:

To pre-select a % of the operating temperature for the tank, hose and guns.

Different percentages of the operating temperature can be selected for the tank, hoses and guns when the equipment is in ENERGY SAVING mode. Values between 50 and 80% can be selected.

LED on : The % values of the operating temperatures for the different devices (divided into 3 groups: tank, hoses, guns) are being programmed for adjustment in ENERGY SAVING.

General operating parameters programme menu:

To enter operating parameters (optionally, with a password) such as temperature measurement unit (ºC or ºF), clearance delay time, maximum temperature, temperature deviations that cause alarms, enabled options, display of operating times, etc.

There is a parameter that automatically copies the value of the temperature selected for the tank on all the output channels that are enabled (channels that are not OFF).

LED on : The general operating parameters are being programmed.

Timer programme menu:

To enter automatic switch-on and switch-off times. Up to 2 on/off time groups can be programmed for each day of the week, and the switch-over to ON, OFF or ENERGY SAVING.

LED on : The timer on/off parameters are being programmed.

Time adjustment programme menu:

To enter the current day of the week and the time on the timer.

LED on : The hour and date are being set on the timer

VALCO MELTON S.L.U. Pol. Ind. Agustinos C/G 34 3116 0 ORCOYEN, NAVARRA

TEL: +34 948 321580 Fax: +34 948 326584 melton@melton.es **www.valcomelton.com** ENGLISH

4.1.4. Setting program menus:

To programme operating parameters, press the button on the control panel, and then press the button to select the required programme menu.

To end the process, press again.

In case of the equipment remains during 1 minute in the programming menu without press any button, the equipment log off the programming menu.

Programming operating temperatures:

To enter this programme, press button once. (led will light).

The two digits on the left show the code of the channel to be programmed. Select the channel by pressing the buttons under these digits.

The digits in the centre show the value of the programmed temperature. Use the keys under them to vary the temperature between 30 and 130ºC (85 and 266ºF).

When the minimum value is reached, the display will show OFF, which means that the channel is disabled.

By pressing the key, the operating temperature displayed is saved.

By pressing SCAN when the equipment is in t0, the system copies in all active channels the tank reference temperature.

The channels are identified by the following codes:

t0	Tank
t1	OUTLET 1 hose
t2	OUTLET 1 gun
t3	OUTLET 2 hose
t4	OUTLET 2 gun
t5	OUTLET 3 hose
t6	OUTLET 3 gun
t7	OUTLET 4 hose
t8	OUTLET 4 gun
t9	OUTLET 5 hose
10	OUTLET 5 gun
11	OUTLET 6 hose
12	OUTLET 6 gun

The number of outputs depends on the equipment type. 4 is normal can be 6 with control card upgrade.

To end the process, press again.

Programming ENERGY SAVING:

To enter this programme, press button then button until (led is lit).

The two digits on the left show the code of the output to be programmed, which is selected

by pressing the ▽ △ keys under them. 3 groups can be selected:

b0	Tank
b1	Hoses
b2	Guns

The digits in the centre show the % of the operating temperature that will be used as the adjustment value for ENERGY SAVING. The ▽ △ keys under these digits change the value between 50 and 80%.

Pressing the ↵ key, we will save the % of temperature displayed.

To end the process, press ⇔ again.

Programming operating parameters:

To enter this programme, press ⇔ button then ↻ button until ☼ led is lit.

The two digits on the left show the code of the parameter to be programmed, which is selected by pressing the ▽ △ keys under these digits.

The digits in the centre, and also the digits on the right, will show the value of the parameter. Press the ▽ △ keys under these digits to alter the values within the ranges specified in Table 1.

Pressing the ↵ key, the operating parameter displayed is saved.

To end the process, press ⇔ again.

1. **P4 parameter: Maximum temperature.**

If this value is modified and after that it is being below of the programmed temperature of any channel then the channel temperatures will be the same as P4 value.

2. **P16 to P26 parameters: I/O configurable parameters.**

It is possible to configure the I/O card contacts functions for different functions:

Function	Number
Disabled	0
Application	1
Star/stop	2
Energy savings	3
Hose-gun channel 1	4
Hose-gun channel 2	5
Hose-gun channel 3	6
Hose-gun channel 4	7
Hose-gun channel 5	8
Hose-gun channel 6	9

– ***Disabled*:**

With this function, we disable this parameter.

– ***Application:***

If there is a “0” (without potential, open contact) the input which has been assigned the application function during more time that appears in P8 parameter (time in minutes) and moreover it´s allowed the pump to work , then the unit goes to energy saving.

If it is selected an “1” (contact is closed) before the P8 parameter time is finished, then the timer is reset and the value of P8 is counted again.

Having the unit in energy saving when an “1” is selected (contact is closed) at the application function assigned input then the unit goes to normal working.

If there is an “1” at any assigned input the unit performance is normal and the timer doesn’t count with the P8.

If P8=0 then the application function is also disabled because the timer is disabled.

– ***Energy savings:***

While it is a “0” (circuit is open) at the input of the energy saving function the unit keeps in standard working.

When there is an “1” (contact is closed) the unit goes to energy saving. In order to keep the energy saving function on it is necessary to keep that “1” (contact is closed) at t he input.

Note:

While we have “0” (open circuit) the equipment will work in normal mode. If we put a “1” (closed circuit) then the equipment will work in energy saving mode.



In case that both application and energy saving functions are configured, the unit gives priority to the “Energy Saving” function but it is allowed to the aplication function to work normaly if there is a “0” in the “Energy Saving” function, in other words, when the unit doesn´t keep in standard working.

– ***Start/Stop:***

If it is a “0” (circuit is open) at the *Start/Stop* function input the unit will keep on working (*Start* function).

If there is an “1”(contact is closed) the unit will turn off.

– ***Hose-gun channel:***

If there is a “0” (circuit is open) at the hose-gun function input then the channel is enabled.

If there is a “1” (contact is closed) at the hose-gun function input then the channel is disabled.

3. P27 parameter: communications modes selection.

This parameter is used to know if external communication are going to be used.

If P27= 0 it means that external communications by PROFIBUS or MODBUS protocols or by I/O States are not going to be used.

If P27= 1 then the MODBUSS communications and the I/O States are activated.

VALCO MELTON S.L.U. Pol. Ind. Agustinos C/G 34 3116 0 ORCOYEN, NAVARRA

TEL: +34 948 321580 Fax: +34 948 326584 melton@melton.es **www.valcomelton.com**

Modbus communications needs specific I/O card for communication mode.

If communications of any of the protocols and the I/O are enabled could be orders conflicts due to the wired communications priority (I/O States) with regards to MODBUS

Programming the timer:

To enter this programme, press button, then button until the icon is indicated.

The two digits on the left show the code that represents the day of the week (with values from 1 to 7). The digits in the centre show the code of the parameter to be programmed, which is selected by the E and F keys (▽ △)

The digits on the right show the value of the parameter. Keys G and H (▽ △) alter these values, within the ranges specified in Table 2.

By pressing the ↵, the information on display is saved.

Table 2. Codes of the timer switch on/off parameters.

d1	01	XX	Switch-on 1 time (hour)(Monday)
d1	02	XX	Switch-on 1 time (minute) (Monday)
d1	03	XX	Type of switch-on 1 (Monday)
d1	04	XX	Switch-off 1 time (hour) (Monday)
d1	05	XX	Switch-off 1 time (minute) (Monday)
d1	06	XX	Type of switch-off 1 (Monday)
d1	07	XX	Switch-on 2 time (hour) (Monday)
d1	08	XX	Switch-on 2 time (minute) (Monday)
d1	09	XX	Type of switch-on 2 (Monday)
d1	10	XX	Switch-off 2 time (hour) (Monday)
d1	11	XX	Switch-off time 2 (minute) (Monday)
d1	12	XX	Type of switch-off 2 (Monday)

This same table is valid for every day of the week, ie, 12 settings for each day.

The TYPE parameter has the following functions:

For switch-on:

VALCO MELTON S.L.U. Pol. Ind. Agustinos C/G 34 3116 0 ORCOYEN, NAVARRA

TEL: +34 948 321580 Fax: +34 948 326584 melton@melton.es **www.valcomelton.com** ENGLISH

TYPE=0	Switch-on selection not active
TYPE=1	The equipment goes from its present status to normal OPERATION
TYPE=2	The equipment goes from OFF to energy saving.

For switch-off:

TYPE=0	Switch-off selection not active
TYPE=1	The equipment goes from its present status to OFF
TYPE=2	The equipment goes from its present status to LOW MAINT.

For easy programming, you can copy Monday parameters by pressing the key (D) when the first parameter of the following days is shown.

To end the process, press again.

Programming the clock

To enter this programme, press button, then button until the icon is indicated.

The two digits on the left show the code of the data to be programmed, which is selected by pressing the keys under these digits.

The digits in the centre show the present day and time according to the timer. These values are altered by pressing the keys under these digits.

By pressing the key, we can save this information.

Identification codes:

r1	Day of the week (1[Monday] to 7[Sunday])
r2	Present time (hour) (0 to 23)
r3	Present time (minute) (0 to 59)

To end the process, press again.

4.2. PNEUMATIC ADJUSTMENT

The adhesive's output pressure is controlled by the pressure regulator and electrovalve unit. This is the element that contains the pneumatic and electro pneumatic control of the pump. It is located in the rear of the applicator, connected directly to the pneumatic pump.

VALCO MELTON S.L.U. Pol. Ind. Agustinos C/G 34 3116 0 ORCOYEN, NAVARRA

TEL: +34 948 321580 Fax: +34 948 326584 melton@melton.es **www.valcomelton.com**

Pressure gauge:

The element that indicates pressure in bar and psi at which the pneumatic cylinder of the pump and the compensating valve operate.



Lift up the adjuster to set and push down to lock.

Set pump pressure to 40 Psi (2.5 bar)

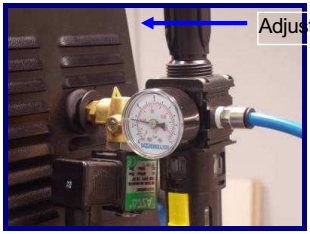

This pressure is a starting point setting. You may need to change pressure setting depending on application.

The pump will operate and pressurize the system.

The ratio between pneumatic and hydraulic pressure is 1:14. This means that, for each pneumatic bar indicated on the pressure gauge, there will be 14 hydraulic bar at the pump.

VALCO MELTON S.L.U. Pol. Ind. Agustinos C/G 34 3116 0 ORCOYEN, NAVARRA

TEL: +34 948 321580 Fax: +34 948 326584 melton@melton.es **www.valcomelton.com**

CHAPTER 5 OPERATION



WARNING: This equipment should only be used by qualified personnel who understand all the procedures and are familiar with the necessary safety measures.

This chapter explains how to use the equipment.



First of all, make sure that the person operating the machine is duly protected and that all safety instructions are followed. All safety equipment should be in perfect condition.

SWITCH ON:



1 Press the ON button.

2 Check that the equipment is correctly adjusted. Readjust if necessary (see Chapter 4).

3 When the equipment is on the programmed temperature and no alarm led is lit, the ON signal is received and the system is ready to run.

4 Permission of main machine is given (in case they are connected). The system has two terminals for external on/off signals.

5 The application can start.



When the equipment is connected to a main machine, it won't run until the external permission is given.

These terminals are shorted in our factory.

Filling the tank



Before filling the tank, put on goggles, gloves and long sleeves to avoid possible burns from splashes of hot adhesive.



1° Ensure that the tank is clean and free of foreign particles.

2° Fill the heated tank with the hot – melt material up to a maximum of 10mm below the edge of the tank.



3° Close the cover of the tank immediately after filling it.

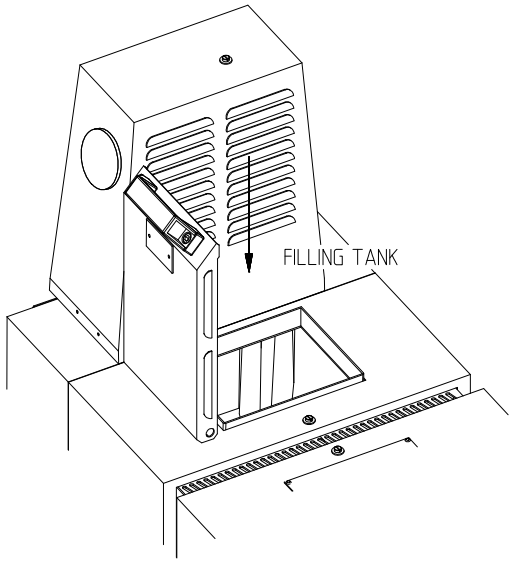

Note: Never operate the applicator if the tank is empty. If the quantity of hot – melt material is very small the tank may overheat, leading to the carbonisation of the HOT-MELT material and the formation of deports inside the unit. This may lead to unnecessary downtimes later on.

. SHUT-DOWNS:

There are two possible types of shut-down:

Pump shut-down:

If you wish the pump to shut down, set the pressure regulator selector to 0.

The temperature control will maintain the machine's temperature.

If the pump is to be shut down for some time, we recommend switching on the Low Maintenance function.

Total shut-down:

To shut down the entire machine, switch off at the main switch.

If the machine is to be shut down for some time, we recommend removing the drum and cleaning the equipment. Leave the melt plate in its lowest position.

VALCO MELTON S.L.U. Pol. Ind. Agustinos C/G 34 3116 0 ORCOYEN, NAVARRA
TEL: +34 948 321580 Fax: +34 948 326584 melton@melton.es www.valcomelton.com

CHAPTER 6 MAINTENANCE

This chapter contains the procedures involved in the maintenance of the follower plate. These maintenance procedures guarantee safe operations and increase the life of the follower plate. Before starting a maintenance operation, carefully read chapter 1. Safety.

First of all, make sure that you are duly protected and follow all pertinent safety measures:

1º Switch off the air at the mains.

2º Switch off the main switch.

3º Lock the main switch in place.

4º Make sure that the power is off.

5º Follow all applicable safety standards.

. MAINTENANCE RECOMMENDATIONS:

The following table shows the frequency with which maintenance operations should be performed:

Frequency	Maintenance
Weekly (40 hours)	Clean the outer surface of the equipment. Use a liquid cleaner following the instructions of the adhesive that is going to be use.
	Inspect all the electric, pneumatic and hydraulic connections. Replace or repair when necessary
	Bleed the drain valve .
When changing the type of hot melt	Change the air regulator filter Clean the tank.
When necessary	Change the air regulator filter Drain the pressure regulator filter.

Anyway, the frequency of this operations depends on the type of adhesive used and the environmental conditions where the equipment is placed.

VALCO MELTON S.L.U. Pol. Ind. Agustinos C/G 34 3116 0 ORCOYEN, NAVARRA

TEL: +34 948 321580 Fax: +34 948 326584 melton@melton.es **www.valcomelton.com** ENGLISH

. MAINTENANCE PROCESSES:



Cleaning the equipment

Vacuum the dust or glue remains or remove with a soft cloth, especially from the distributor and bleed valves.

Clean the control panel periodically with a soft cloth. Do not use solvents, which could rust the controls.

Use a soft cloth to remove dust and glue remains from the cylinder, valve and exchange.



If you use a cleaning agent, make sure that it is compatible with the adhesive being employed.

When in doubt, contact the adhesive manufacturer.

. Bleeding the air filter of the pressure regulator:



Press the button at the bottom of the air filter.

The pneumatic system will soil the filter; change whenever necessary.

Draining the tank



Before draining the tank, put on goggles, gloves and long sleeves to avoid possible burns from splashes of hot adhesive.



1° Heat the tank until the adhesive has melted.

2° Reduce the air pressure to zero.

3° Eliminate pressure from the system by firing the manual guns or opening the bleed valve.



4° Place a suitable receptacle below the manifold.

5° Unscrew the draining plug of the manifold with an 8mm Allen key and let the tank empty.

6° Once the tank is empty, we recommend changing the filter and the seals of the disassembled parts.

VALCO MELTON S.L.U. Pol. Ind. Agustinos C/G 34 3116 0 ORCOYEN, NAVARRA

TEL: +34 948 321580 Fax: +34 948 326584 melton@melton.es **www.valcomelton.com**

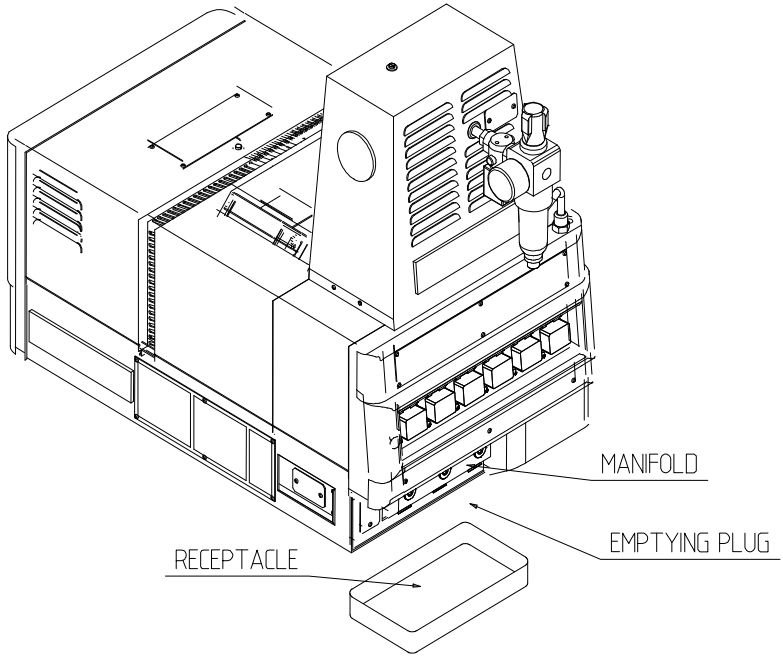

Bleed process:

The bleed process (filter draining) is made in order to remove any foreign bodies that may have been retained in the filter screen.

Before purging the filter put on glasses, gloves and long sleeves to avoid burns from the hot melt adhesive.

1º Preheat tank until adhesive is molten.

2º Reduce the air pressure to Zero.

3º Place a container below before disassembling.

4º Open drain valve with a 5mm. allen key.

VALCO MELTON S.L.U. Pol. Ind. Agustinos C/G 34 3116 0 ORCOYEN, NAVARRA
TEL: +34 948 321580 Fax: +34 948 326584 melton@melton.es **www.valcomelton.com**

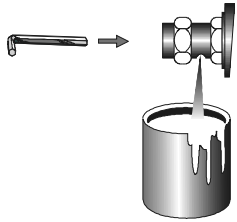

Advice: Clean the filter at least once a month or every two hundred hours of working.

5º Increase the air pressure until the material flows from the drain valve.

6º When the adhesive is clear of foreign bodies close drain valve

Set the system to the opperating pressure.

. Bleeding the air filter of the pressure regulator:





In order to place and to fix the pump housing it is necessary to follow these steps:

1. Open the back door.



2. Place the security cable in the fast-on terminal that is in its interior.

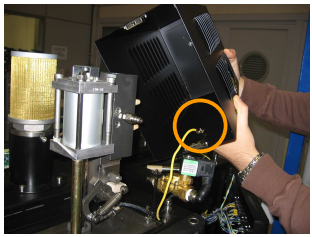

3. Place the pump housing, ***without making*** the connection of the lateral fixations.



4. To make sure that the security cable is in the interior of the pump housing, pulling the security cable through the opening that is behind the back door.

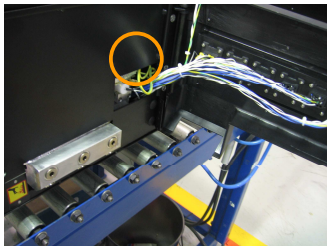

5. Fix the housing to the lateral fixations and screw the superior fixation of the same one.

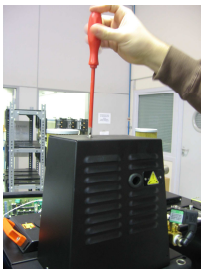

VALCO MELTON S.L.U. Pol. Ind. Agustinos C/G 34 3116 0 ORCOYEN, NAVARRA

TEL: +34 948 321580 Fax: +34 948 326584 melton@melton.es **www.valcomelton.com**

6. Finally, close the back door.



CHAPTER 7 SOFTWARE SPECIFICATIONS

I/O functions. I/O card pulses:

I/O car diagram:

Besides supporting communications by RS-485 the I/O card is able to have a wired communication. This wiring system has four functions.

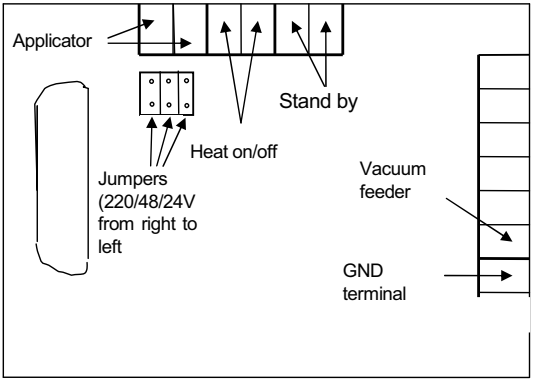

VALCO MELTON S.L.U. Pol. Ind. Agustinos C/G 34 3116 0 ORCOYEN, NAVARRA
TEL: +34 948 321580 Fax: +34 948 326584 melton@melton.es www.valcomelton.com

Photo of the I/O card

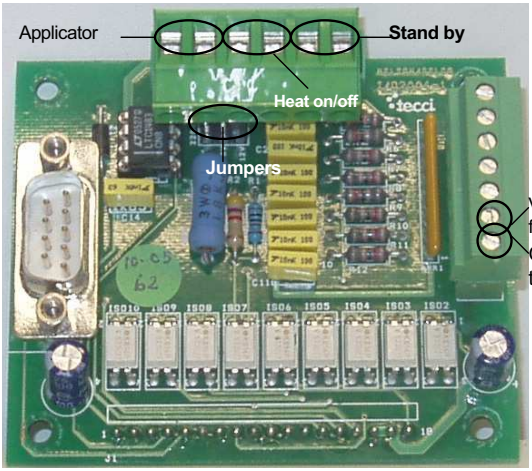

Connector	Function
Applicator	Application fuction
Heat on/off	Heat on/off function
Stand by	Stand by function
Vacuum feeder	Level sensor input

Application function

This function operates as following:

When the pulse signal is no longer received for a time (minutes) exceeding the value set in P8 the unit goes to stand-by mode.

Once the unit is in stand-by mode there are two options for setting the unit in standard operation:

a) Pressing the button situated in the panel
b) Causing a signal at the stand by function input.

If a pulse is caused at the input before finishing the P8 time then the time resets and begins to count again.

Heat on/off function

The operating mode of the unit changes if there is a pulsed on/off signal.

Stand by function

The unit goes into stand-by mode if there is a pulsed on/off signal.

VALCO MELTON S.L.U. Pol. Ind. Agustinos C/G 34 3116 0 ORCOYEN, NAVARRA
TEL: +34 948 321580 Fax: +34 948 326584 melton@melton.es www.valcomelton.com

Feeder alarm function.

The unit is enabled to deal the feeder alarm by this input. This function will be always wired and working for the right working of the feeder system.



When we close the circuit between the GNR and the I/O card then it send a pulse. If the contact is close, it cann't send signal to others contacs.

Con1 (1-2) Con X D – GND

Con2 (3-4)

Con3 (5-6)

It can't send more than one pulse.

VALCO MELTON S.L.U. Pol. Ind. Agustinos C/G 34 3116 0 ORCOYEN, NAVARRA

TEL: +34 948 321580 Fax: +34 948 326584 melton@melton.es **www.valcomelton.com**